Series information
LD/SuME_01_EN

STROBL PUMPEN

Compact pumps Series LD/S and ME

- Product overviews
- Executions
- Materials
- Types of seals
- Dimensional drawings and exploded views

STROBL

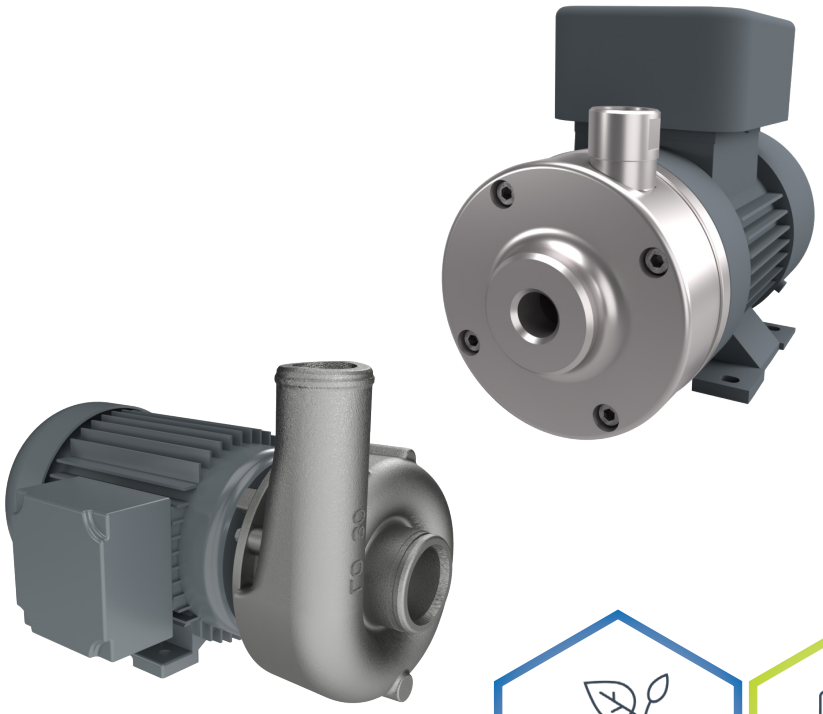

Table of contents

General description 3
Fields of application 3
Operation data 3
Connections 3
Type code 4
Materials 5
Types of seals 5
Drives 5
Characteristic curves 6
Dimensional drawings 10
Exploded views 14

STROBL PUMPEN

Member of German Water Partnership

Strobl Pumpen – Your Partner for High-Quality Centrifugal Pumps „Made in Germany"

Since 2006, **Strobl Pumpen** has been representing the highest quality, innovation, and precision in fluid handling. Whether for municipal applications, mechanical engineering, shipbuilding, or the demanding chemical and oil industries – we offer **customized pump solutions** perfectly fitting to your requirements

Our goal is simple: **to find the best solution for your pumping challenge**. That's why we not only supply individual pumps, but also complete systems and packages – all from one single source.

Quality you can rely on:
Our products are designed and manufactured exclusively in Germany and proudly bear the "Made in Germany" seal of quality. From the initial design to final testing, precision is our top priority. Our ISO 9001 certification guarantees consistently high standards – day after day, year after year.

Qualitätsmanagement ISO 9001:2015

Umwelt + Klimapakt Bayern

Innovation meets responsibility:
We think ahead – also with the future in mind. Sustainability is not just a buzzword for us, but a lived reality. Energy-efficient machinery, rainwater harvesting, an electric vehicle fleet, and energy-optimized buildings are all part of our corporate philosophy. Since 2019, we have been a proud member of a Bavarian environmental alliance called "**Umweltpakt Bayern**" and voluntarily commit to additional environmental measures.



A family business with heart and mind:
As family owned and managed company based in **Hilpoltstein, Bavaria, near Nuremberg**, we combine traditional values with modern engineering. Our highly motivated team is the heart of our success – dedicated, solution-oriented, and always focused on what matters most:
Your satisfaction.

metropolregion nürnberg
KOMMEN. STAUNEN. BLEIBEN.

Wir sind Mitglied im & Familienpakt Bayern

With continuous development, technical excellence, and a spirit of partnership, we are shaping the future of fluid handling.

Strobl Pumpen – We move fluids. Precisely. Reliably. Sustainably.

General description

Compact pumps of series LD/S and ME are single stage normal priming centrifugal pumps in a space-saving design. The pumps are designed with an open impeller, allowing them to be highly resistant to contamination. Special models for higher system pressures are available upon request.

Fields of application

The primary application of compact pumps is pumping clean, slightly contaminated, or lint-laden liquids in small devices, systems, and machines. Other customers are currently using compact pumps in the following areas:



- Recirculation of liquids in machines
- Integration into industrial washing and dishwashing machines
- HVAC technology



- Shipbuilding
- Water treatment

Operation data

Flow:	Q to 90 m^3/h
Head:	H to 85 m
Motor power:	P from 0,06 kW to 22 kW
Casing design pressure:	Series LD/S and ME 500/12, ME 950/10: 6 bar at 20°C ME 90/6, ME 110/20 and ME 110/40: 16 bar at 20°C

Connections

For the LD/S series and the ME 500/12 and ME 950/10 pumps, suction and discharge connections are available with threads or hose fittings. The ME 90/6 and ME 110 pumps can be equipped with internal or external threads.

STROBL PUMPEN

Type code

Series

LD/S 26-G
ME 950/10-G

LD/S	- Compact pumps for various applications (standard version)
LDN/S	- Compact pumps in stub shaft execution with standard motor
ME	- Compact pumps for various applications (standard version)
MEN	- Compact pumps in stub shaft execution with standard motor

If the medium is polluted or fuzzy, series LD/S and ME are ideal. Open impeller constructions suit the operation with slightly polluted mediums best.
Pumps series MEN and LDN/S are block pumps that are executed with stub shaft. This way special motor standards (IE4, NEMA, ATEX, etc.) can be fulfilled.

Connection type

LD/S 26-**G**
ME 950/10-**G**

	- Hose connection
G	- Threaded connection
IG	- Inner thread
AG	- External thread

Impeller execution

Pumps in the LD/S and ME series are equipped with open impellers as standard.



Materials

Part	Material code		
	Y501	Y506	Y516
Casing	Stainless steel-1.4408	Stainless steel-1.4301	Stainless steel-1.4301
Impeller	Stainless steel - 1.4408	Stainless steel - 1.4408	Stainless steel-1.4301
Shaft	Duplex steel - 1.4462		

Types of seals

Directly integrated balanced seals (Z1XX)

- Standard version: Direction-of-rotation-independent rubber bellow seal with carbon/SiC material combination and elastomers in NBR, FKM, EPDM, HNBR, etc.

Drives

Three-phase induction motors with efficiency classes in accordance with EN 60034-30 are used as standard drive.
Optional motors include higher efficiency classes according to NEMA (electrical or mechanical), explosion-proof versions (ATEX), as well as special designs with specific approvals or classifications (e.g., marine classifications) are available as options.

If desired, a frequency converter can also be mounted directly on the motor.

Direction of rotation:

ME 90/110 and LD/S 40/60/65/75/80
- Clock-wise viewed onto fan cover

LD/S 26, ME 500, ME 950
- Counter clock-wise viewed onto fan cover

STROBL PUMPEN

Characteristic curves

LD/S - 3000 min-1

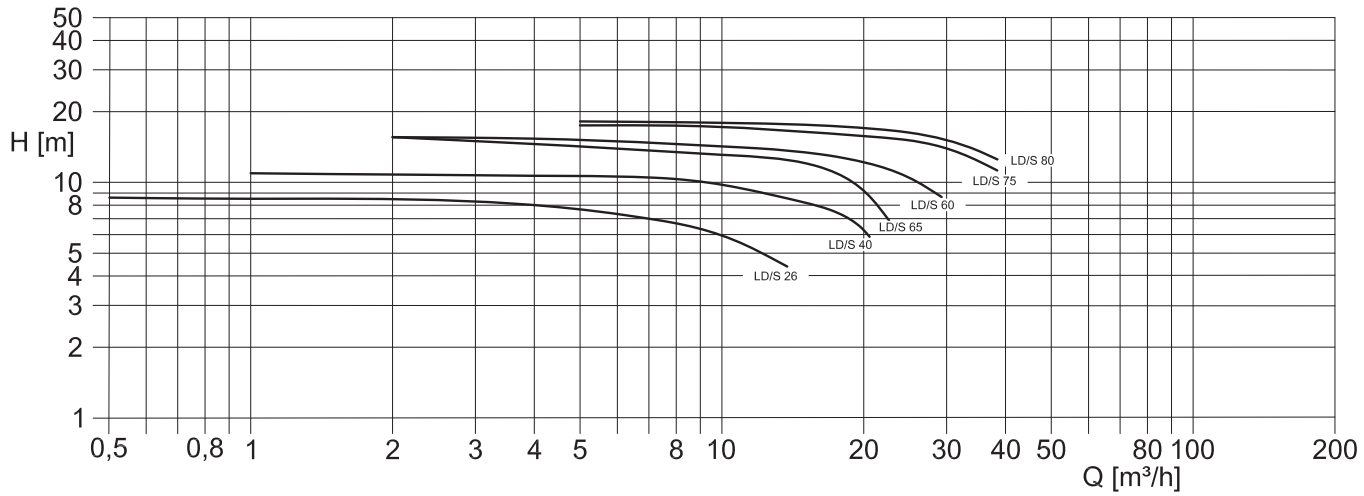

LD/S - 3600 min-1

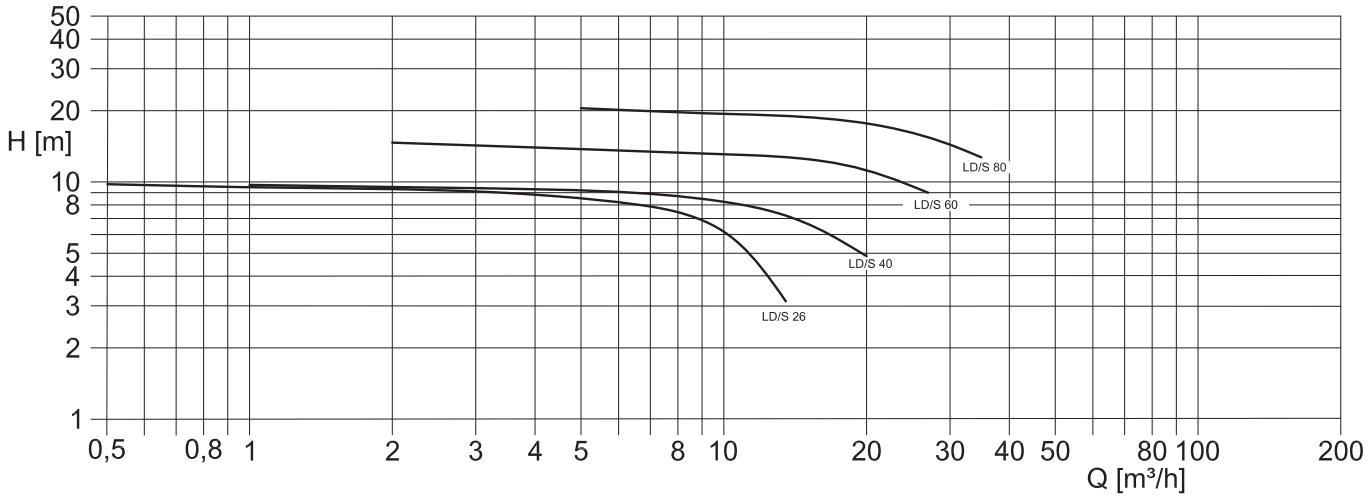

ME - 3000 min-1

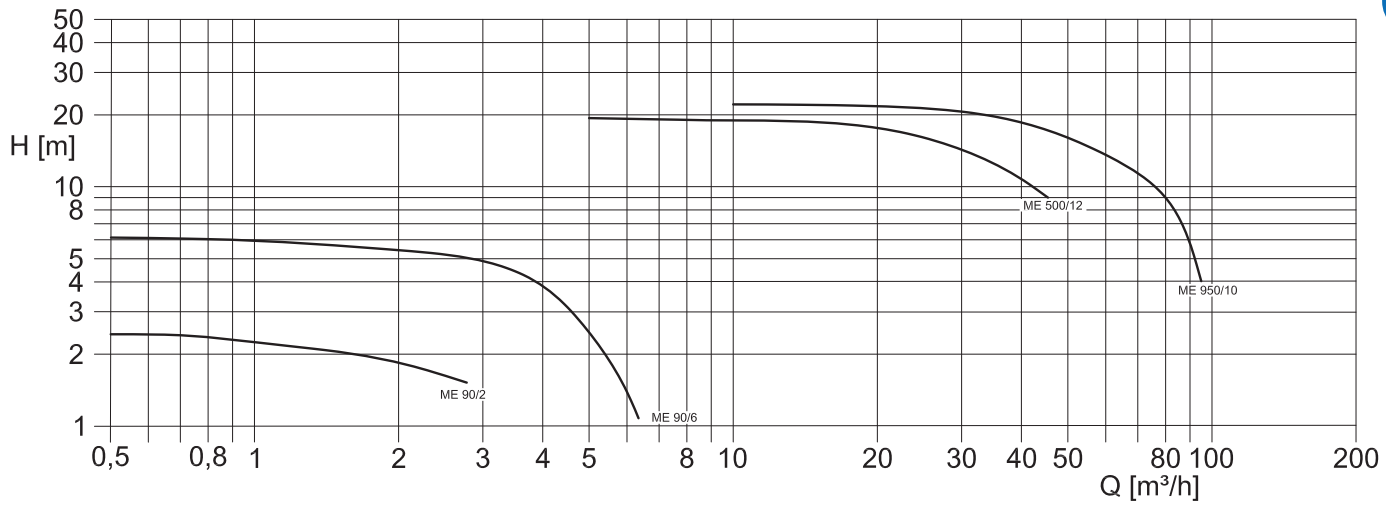

ME - 3600 min-1

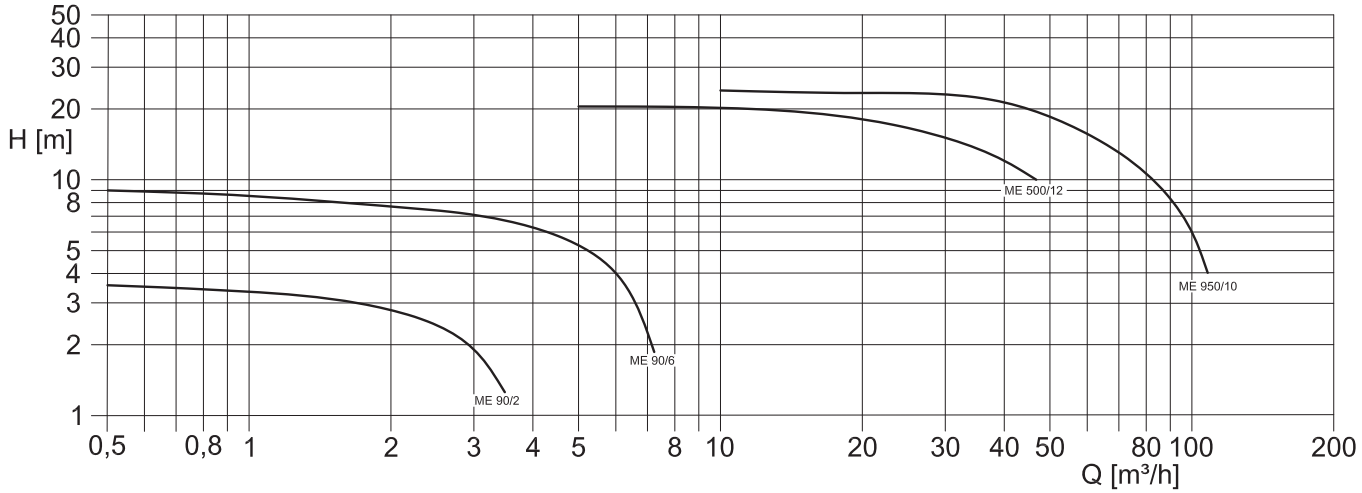

STROBL
PUMPEN

Information on dimensional drawings and exploded views

Please note the information below regarding the following pages:

- All dimensions are given in mm.
- On the ME series, fittings can be arranged in 60° or 90° steps, and on the LD/S series, in 45° steps.

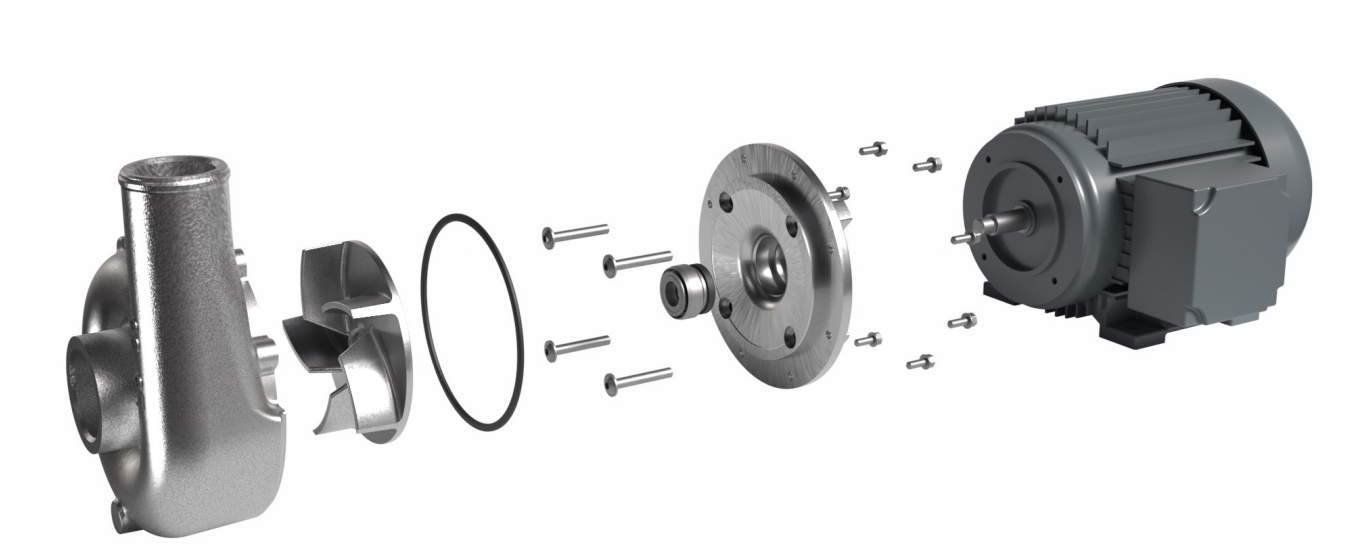

STROBL PUMPEN

Dimensional drawings

LD/S 26, LD/S 40, LD/S 60, LD/S 65, LD/S 75 and LD/S 80

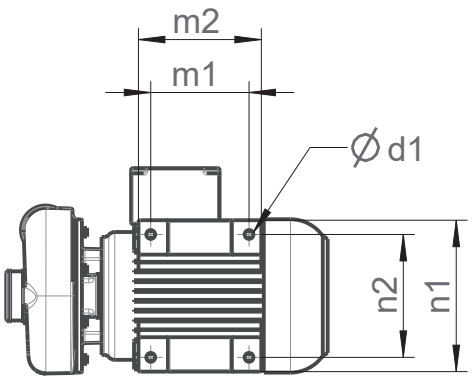

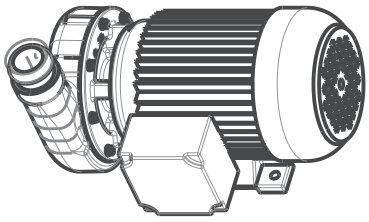

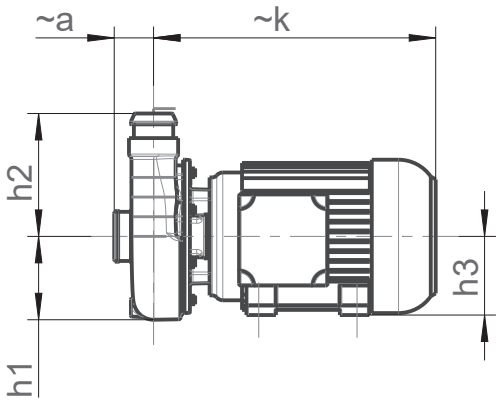

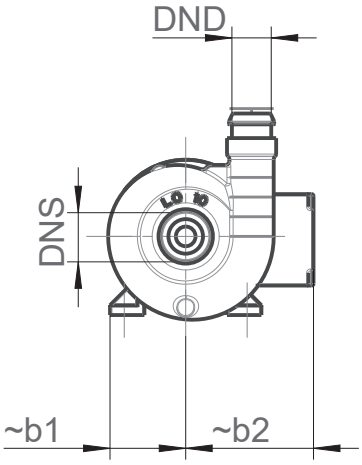

Type	Motor size	DNS	DND	~a	b1	b2	d1	h1	h2	h3	~k	m1	m2	n1	n2
LD/S 26	63	40	40	36,5	66	119	Ø7	78	102	71	270	90	106	128	112
LD/S 26-G		G 1¼"	G1"												
LD/S 40	71	50	40	38	79	119	Ø7	85	125	71	293				
LD/S 40-G		G 1¼"	G 1¼"												
LD/S 60	80	50	40		77	130	Ø10	85	125	80	295	100	125	150	125
LD/S 60-G		G 1¼"	G 1¼"												
LD/S 65		50	40	77	75			80							
LD/S 65-G		G 1¼"	G 1"												
LD/S 75	90L	60	60	83	82	85	10,5x12	90	145	90	359	100	165	165	140
LD/S 75-G		G 1½"	G 1½"												
LD/S 80	90 S	60	50	36	82	130	Ø10	82	130	80	295	100	125	150	125
LD/S 80-G		G 1½"	G 1¼"												

ME 90/6

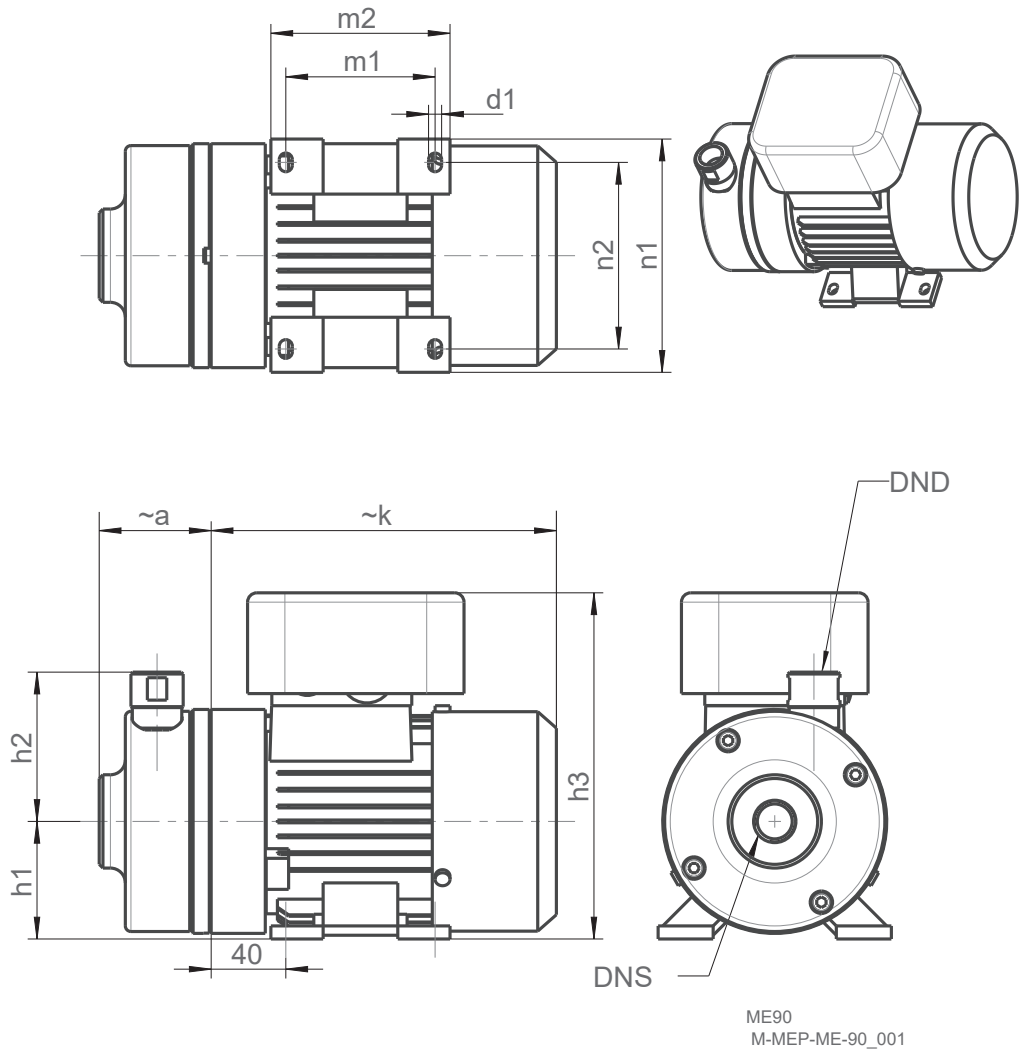

Type	Motor size	DNS	DND	~a	b1	b2	d1	h1	h2	h3	~k	m1	m2	n1	n2
ME 90/60	63	G ½"	G ½"	31	75	75	Ø7	63	80	185,5	223	80	96	116	100

STROBL PUMPEN

ME 500/12 and ME 950/10

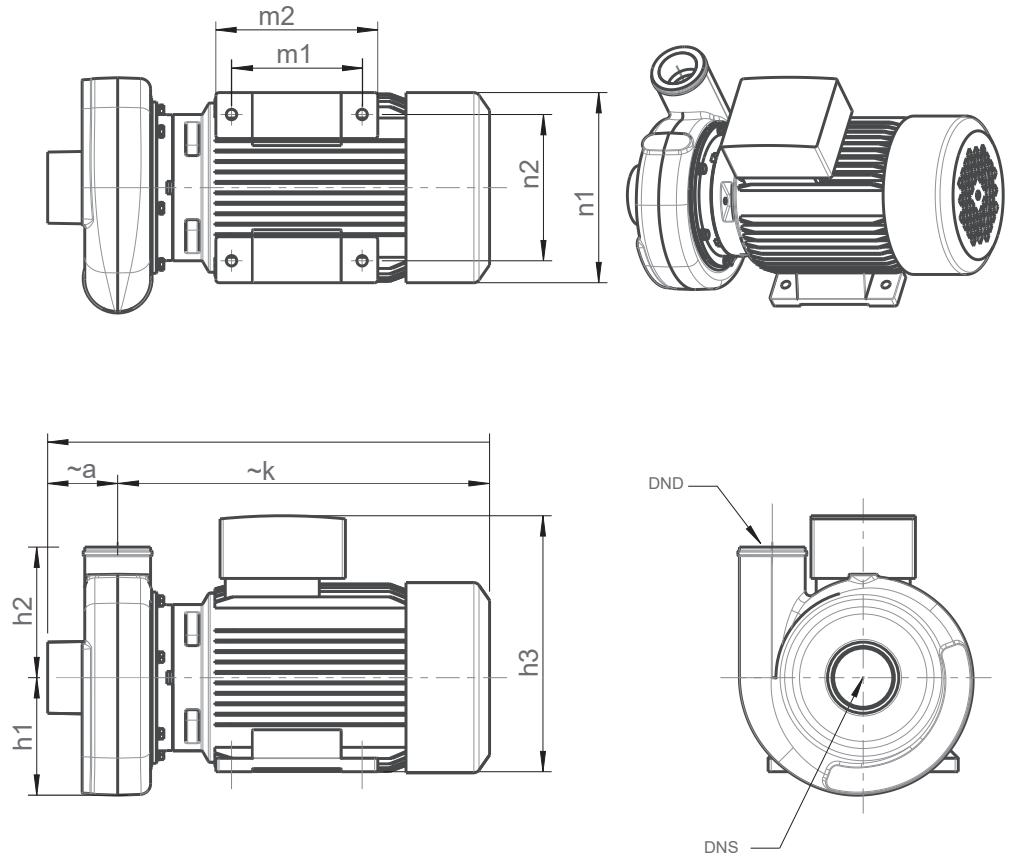

ME 500
M-MEP-ME-500_001

Type	Motor size	DNS	DND	~a	b1	b2	d1	h1	h2	h3	~k	m1	m2	n1	n2
ME 500/12	90L	63	63	67	118,5	105	Ø10,5	112,5	125	245	369	100	165	165	140
ME 500/12-G		G 2½"	G 2												
ME 950/10	100M	63	63	75			Ø12			257	441	140	202	225	190
ME 950/10-G		G 2½"	G 2												



ME 750

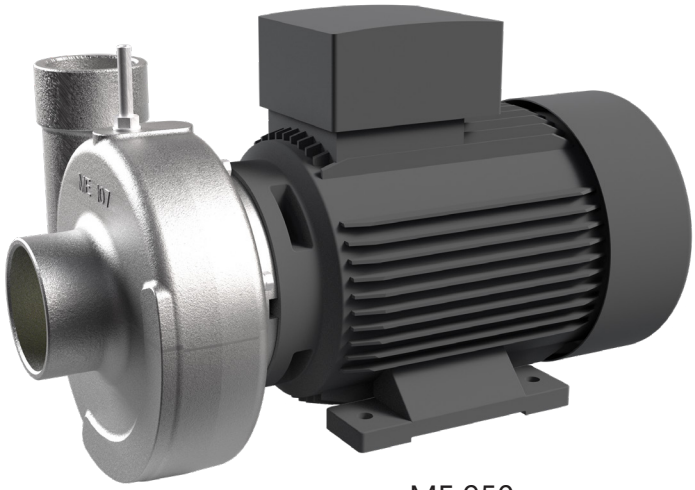

ME 950

STROBL PUMPEN

Exploded views

LD/S 26, LD/S 40, LD/S 60, LD/S 65, LD/S 75 and LD/S 80

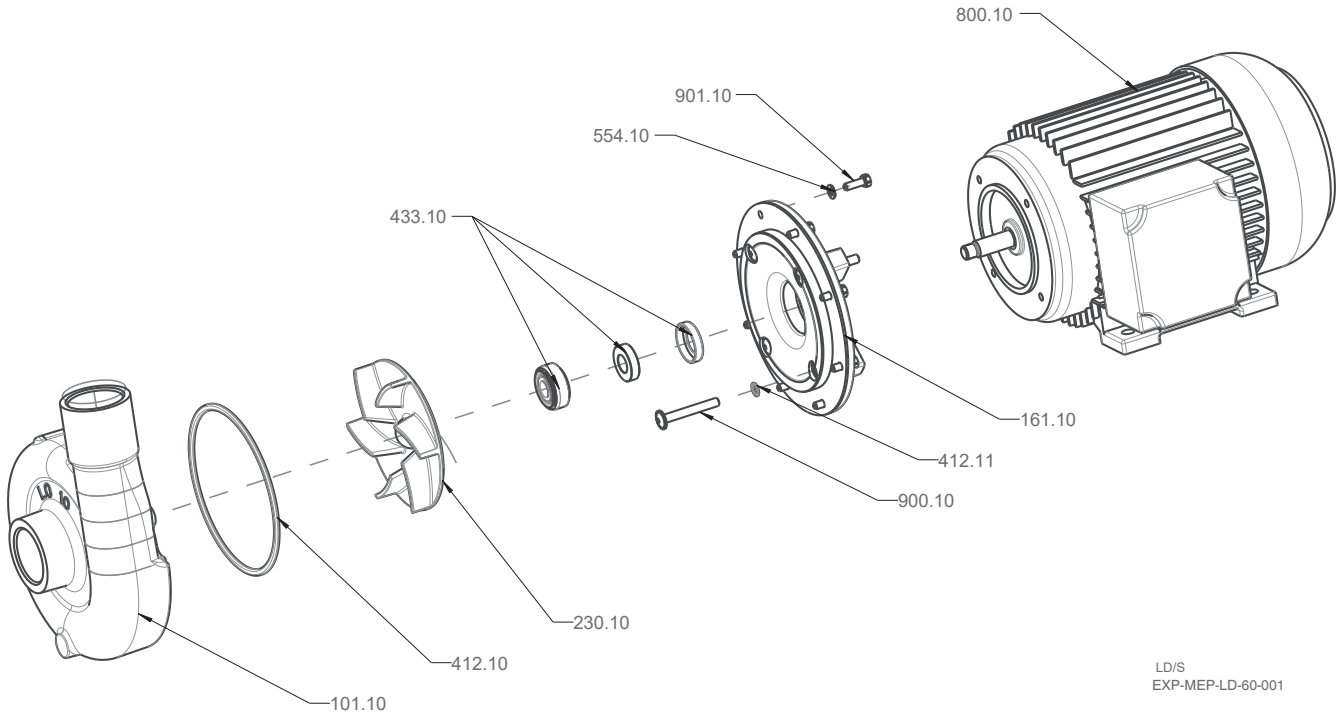

LD/S
EXP-MEP-LD-60-001

ME 90/6 - Inner thread

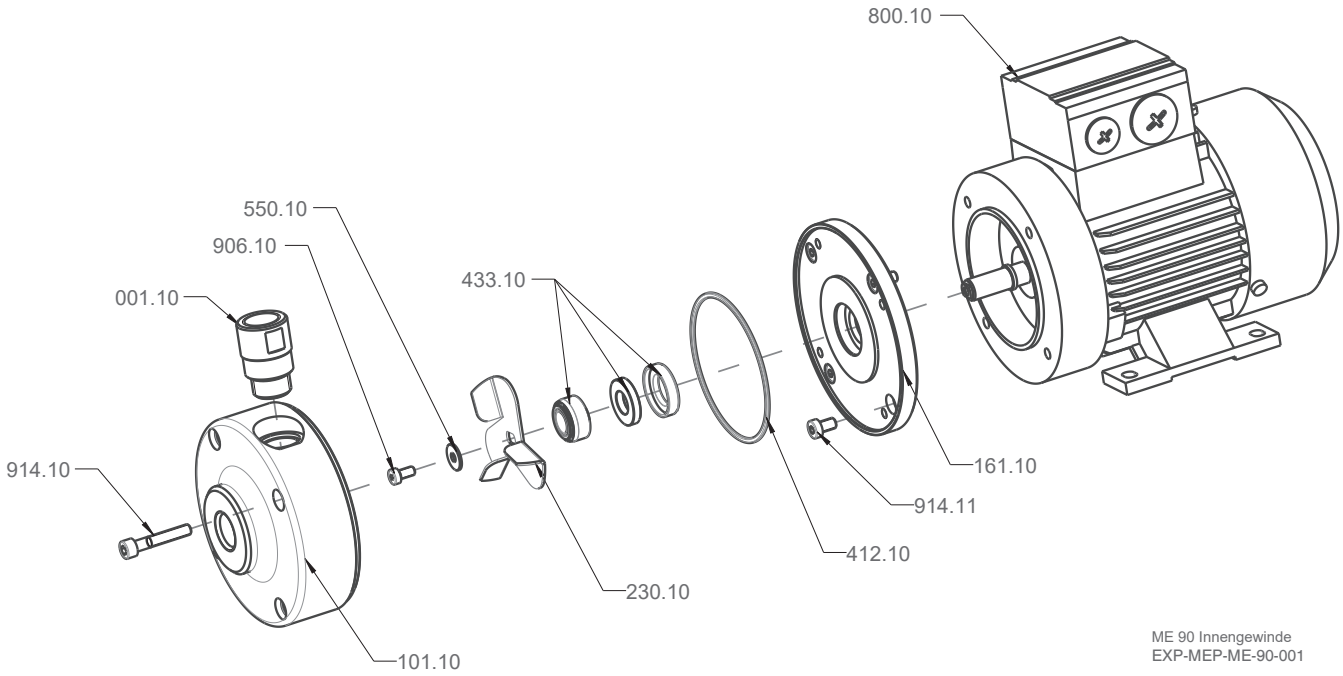

ME 90 Innengewinde
EXP-MEP-ME-90-001

ME 500/ 12 and ME 950/10

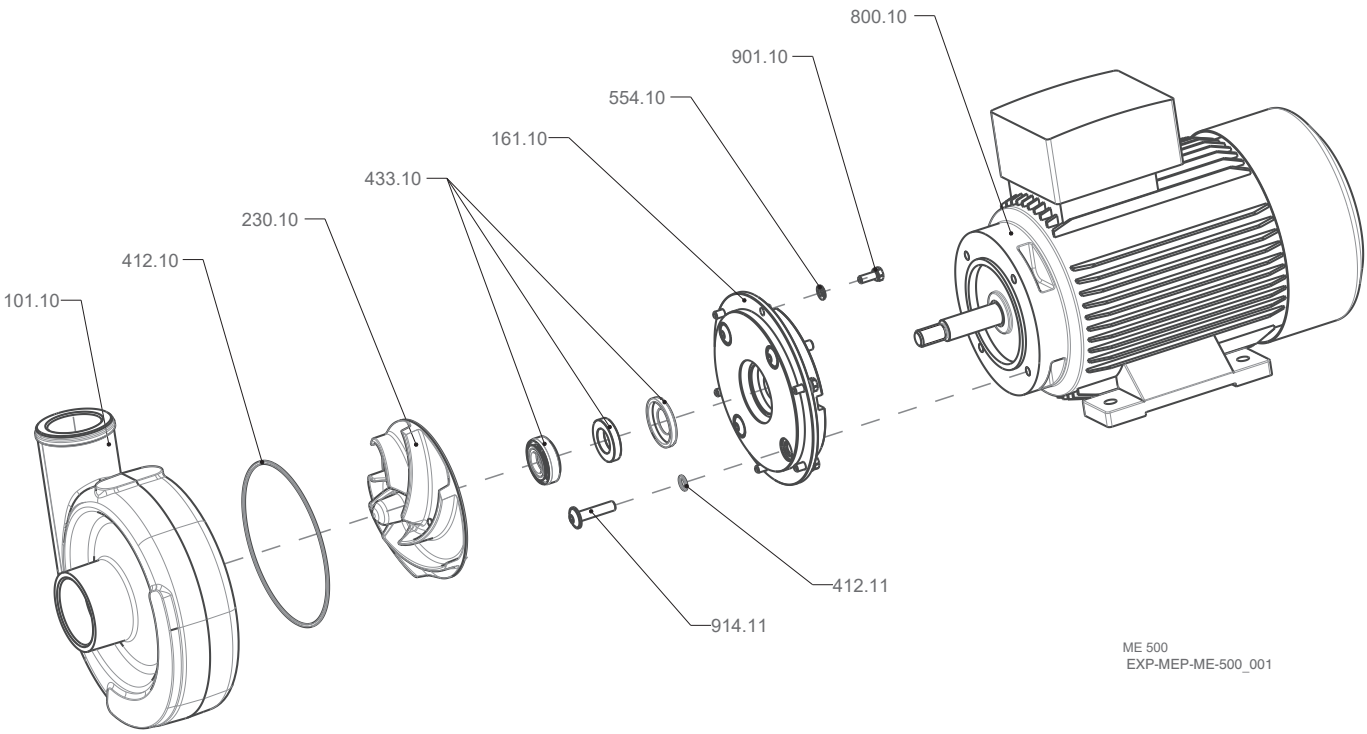

ME 500
EXP-MEP-ME-500_001

ME90/6 - External thread

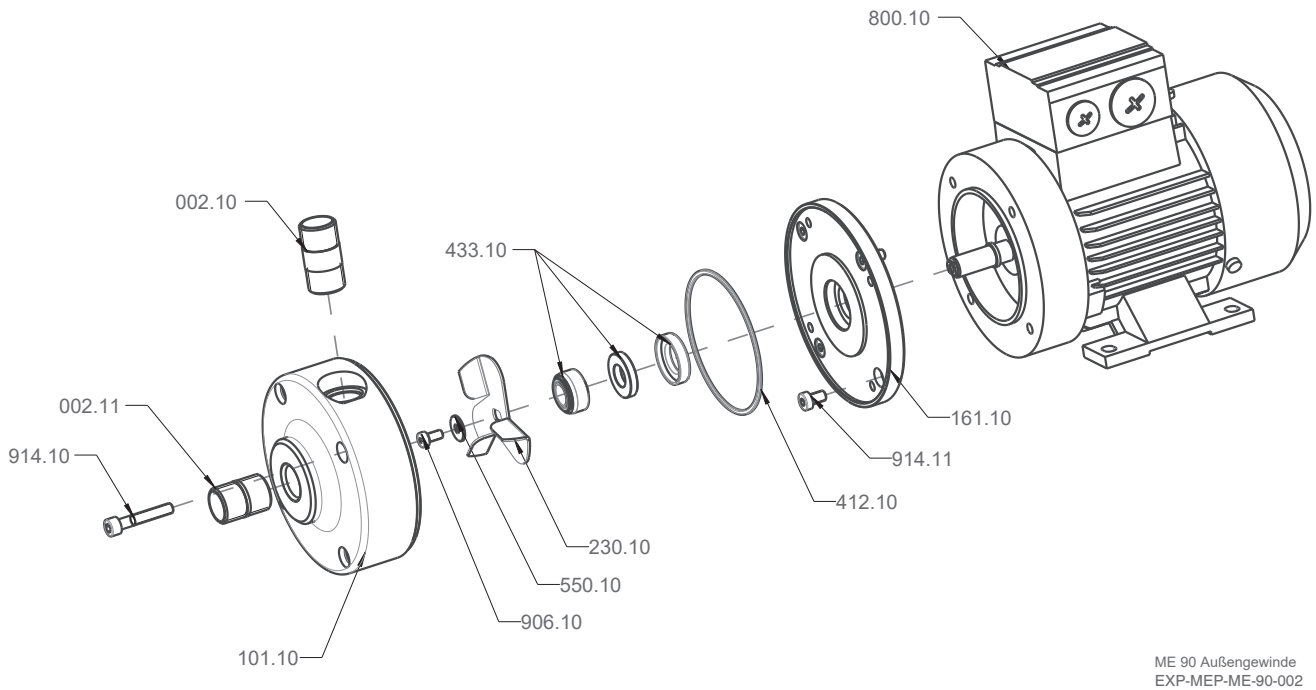

ME 90 Außengewinde
EXP-MEP-ME-90-002

Strobl Pumpen

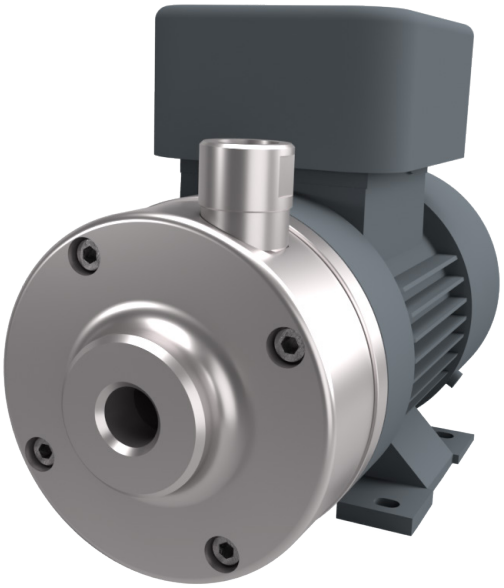





Your contact

Strobl Pumpen GmbH & Co. KG - Boschring 3 - 91161 Hilpoltstein
Tel.: +49-9174-97708-0 - www.strobl-pumpen.de - info@strobl-pumpen.de

Specifications subject to change without notice

Edition 09/2026